T&S BRASS AND BRONZE WORKS, INC.

2 Saddleback Cove / P.O. Box 1088
Travelers Rest, SC 29690

Travelers Rest, SC: 800-476-4103 Simi Valley, CA: 800-423-0150 Fax: 864-834-3518 www.tsbrass.com

REG. #A2601
ISO #9001

Model No.
B-1105-LN

Item No.

This Space for Architect/Engineer Approval

Job Name_____Date_____

Model Specified_____ Quantity_____

Customer/Wholesaler_____

Contractor_____

Architect/Engineer_____

ADA Compliant

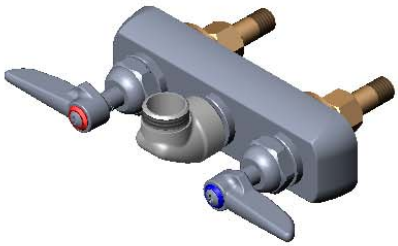

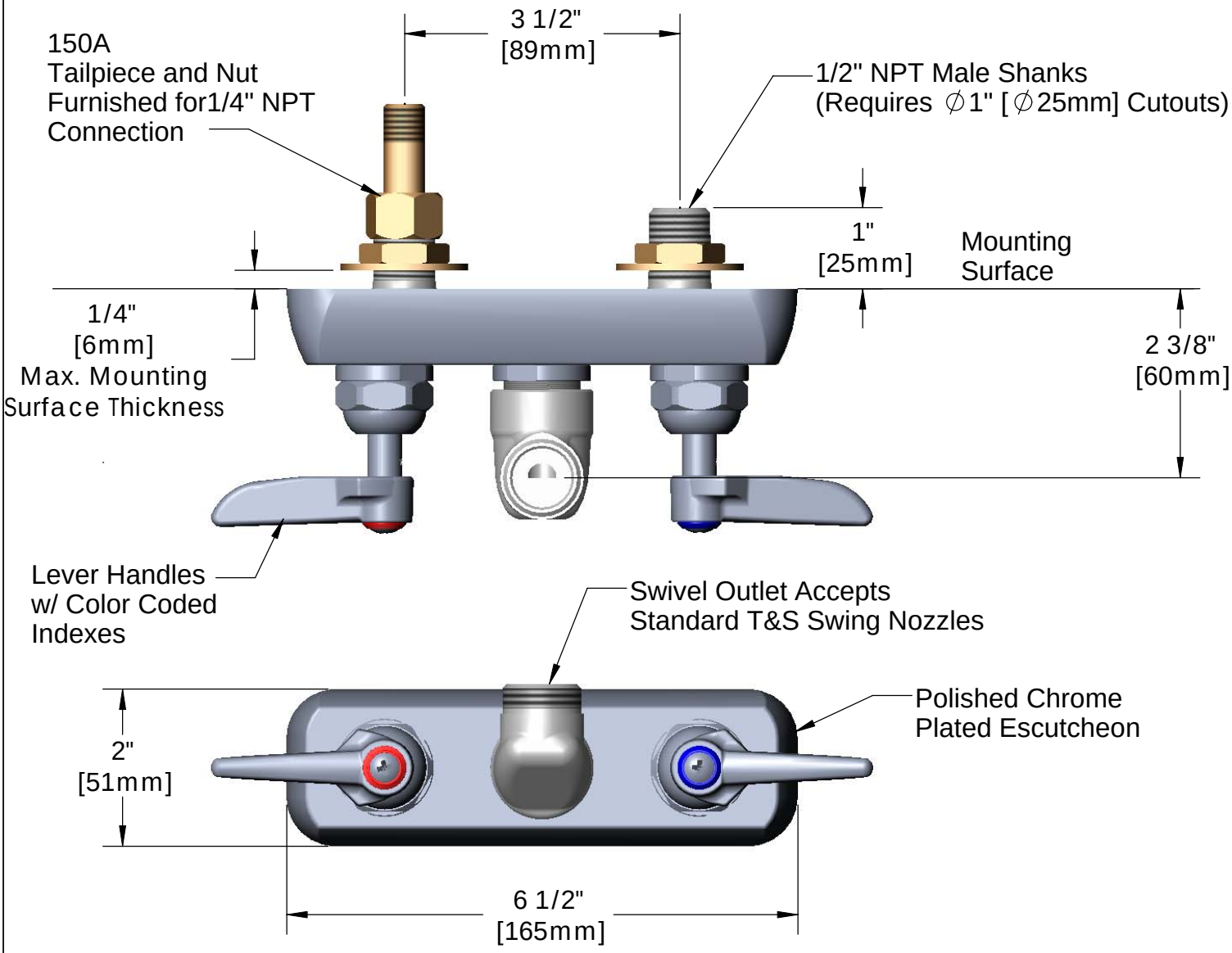

Product Specifications:

3 1/2" Inlet Centers Wall Mount Workboard Faucet Less Nozzle w/ Lever Handles & 1/2" NPT Male Inlets

Drawn	Checked	Approved
KJG	DHL	JHB
Scale: 1:2		Date: 09/29/08

T&S BRASS AND BRONZE WORKS, INC.

2 Saddleback Cove / P.O. Box 1088
Travelers Rest, SC 29690

Travelers Rest, SC: 800-476-4103 Simi Valley, CA: 800-423-0150 Fax: 864-834-3518 www.tsbrass.com

REG. #A2601
ISO #9001

Model No.
B-1105-LN

Item No.

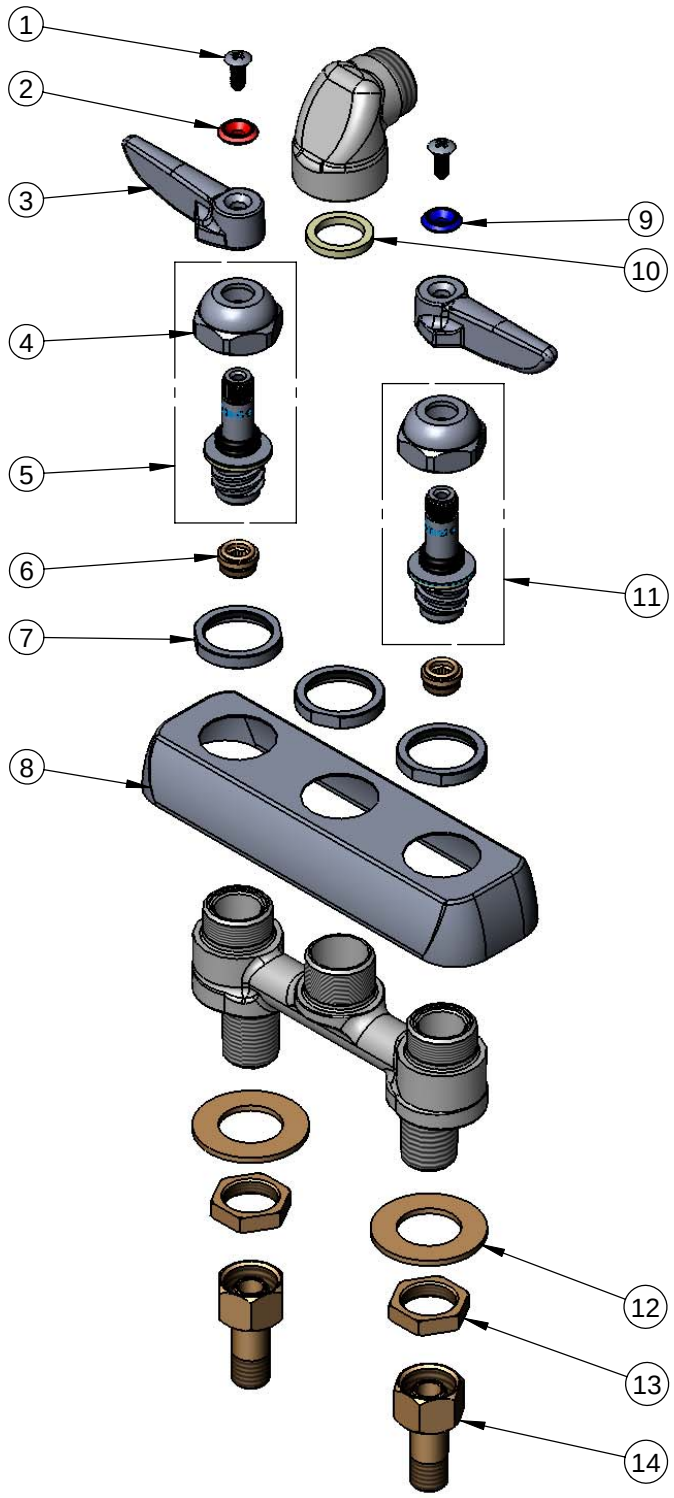

ITEM	PART NO.	DESCRIPTION
1	000922-45	Lever Handle Screw
2	001661-45	Red Index-HW
3	001638-45	Lever Handle
4	009749-25	Bonnet Nut
5	009753-25	B-1100 RH Spindle Assembly
6	000763-20	Seat
7	000712-25	Escutcheon Lock Nut
8	001258-40	Escutcheon
9	001660-45	Blue Index-CW
10	001017-45	Washer
11	009754-25	B-1100 LH Spindle Assembly
12	000999-45	Brass Lock Washer
13	002954-45	Shank Lock Nut
14	150A	Bag of (1) Nut & (1) Tailpiece

Product Specifications:

3 1/2" Inlet Centers Wall Mount Workboard Faucet Less Nozzle w/ Lever Handles & 1/2" NPT Male Inlets

Drawn	Checked	Approved
KJG	DHL	JHB
Scale: NTS		Date: 09/29/08